JACK 杰克

快速服务100%

零件手册
Parts Manual

A5 系列 A5 Series

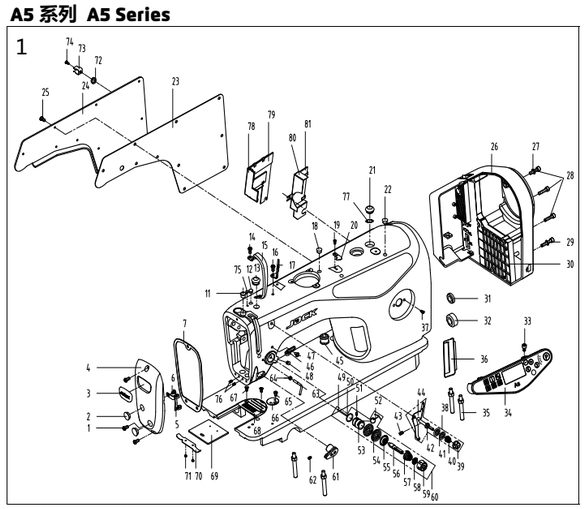

1. 机壳、外装分组件/Machine Frame & Miscellaneous Cover Components

序号 NO.	公司件号	Part NO.	名称	PartName	零件描述	Description	数量	Number
1	101S11001		后窗板螺钉SM3/16"×28 L=9		Screw SM3/16"×28 L=9		3	3
2	10122003		面板调节孔螺塞		Rubber plug		2	2
3	13837002		商标牌		Head card		1	1
4	303534		面板（喷漆）		Face plate asm		1	1
5	13813005		左线钩		Thread guide left		1	1
6	101S11007		右线钩螺钉SM11/64"×40 L=6		Screw SM11/64"×40 L=6		1	1
7	14122002		面板垫		Face plate gasket		1	1
11	10122013		针杆上衬套孔塞		Rubber plug		1	1
12	10122005		挑线连杆销螺孔塞		Rubber plug		1	1
13	10122004		针杆曲柄螺孔塞		Rubber plug		1	1
14	101S11004		挑线杆护罩螺钉SM3/16"×28 L=7		Screw SM3/16"×28 L=7		1	1
15	13812018		挑线杆防护罩		Thread take-up lever cover		1	1
16	101S11004		挑线杆护罩螺钉SM3/16"×28 L=7		Screw SM3/16"×28 L=7		1	1
17	13512004		三孔线勾		3-hole thread guide		1	1
18	10122005		挑线连杆销螺孔塞		Rubber plug		1	1
19	114S11015		割线刀螺钉SM9/64"×40 L=6		Screw SM9/64"×40 L=6		2	2
20	11419001		割线刀		Knife		1	1
21	20722007		油塞		Rubber plug		1	1
22	13822001		操作屏孔塞		Rubber plug		2	2
23	13822007		后窗板垫		Side plate gasket		1	1
24	302592		后窗板（喷漆）		Side plate		1	1
25	101S11001		后窗板螺钉SM3/16"×28 L=9		Screw SM3/16"×28 L=9		11	11
26	1381103000		一体机电控罩壳组件（鲍麦克斯）		Electronic control box		1	1
27	W01009		GB/T97.1-1985垫圈 5		Washer 5		2	2
28	114S13001		直驱电机螺钉M5×20		Screw M5×20		3	3
29	114S30001		螺栓(内六角)M5×25		Screw M5×25		1	1
30	14133002		一体机电控组件（鲍麦克斯）		Electronic control box		1	1
31	10122006		送料调节器孔塞		Rubber plug		1	1
32	10122007		下轴工艺孔塞		Rubber plug		1	1
33	138S05001		操作面板螺钉		Screw		2	2
34	14133001		一体机电控面板组件（鲍麦克斯）		Control panel,powermax		1	1
35	140S12001		底板支柱		Machine head stud		2	2
36	13822002		装饰条		Decorative article		1	1
37	101S11004		螺钉		Screw		2	2
38	1381300400		小夹线器组件		Thread tension asm.		1	1
39	138S16019		小夹线器螺母		Thread tension nut		1	1
40	11227001		小夹线弹簧		Thread tension spring		1	1
41	11212004		小夹线板		Thread tension disk		2	2
42	13810008		小夹线器螺柱		Thread tension post		1	1
43	138S08006		小夹线器固定螺钉SM3/16"×28 L=7		Screw SM3/16"×28 L=7		1	1
44	13812066		过线板		Thread tension guide plate		1	1
45	14122001		橡皮塞(四孔)		Rubber plug		1	1
46	10113004		右线钩		Thread guide right		1	1
47	101S11007		右线钩螺钉SM11/64"×40 L=6		Screw SM11/64"x40 L=6		1	1
48	101S15010		左销螺钉SM15/64"×28 L=10.5		Screw SM15/64"x28 L=10.5		1	1
49	10126002		松线钉		Tension release pin		1	1
50	10122014		挑线簧调节座O型圈		Rubber ring		1	1
51	101S15005		夹线紧固螺钉SM9/64"x40 L=5.5		Screw SM9/64"x40 L=5.5		1	1
52	10127001		挑线簧		Thread take-up spring		1	1
53	10103011		挑线簧调节座		Thread tension base		1	1
54	10112005		夹线板		Thread tension disk		2	2
55	10112006		松线板		Disk stopper		1	1
56	101s30002		夹线螺钉		Thread tension post		1	1
57	10127002		夹线弹簧		Thread tension spring A		1	1
58	10112007		夹线制动板		Thread disk rotating stopper		1	1
59	138S16013		夹线螺母		Thread tension nut		1	1
60	1381300500		夹线器组件		Thread tension asm.		1	1
61	1383002700		电子夹线器组件		Nest less e-device		1	1
62	S10008		凹端紧定螺钉M4X6		Screw M4X6		1	1
63	11413011		固定式缓线钩		Thread guide		1	1
64	401S16001		螺母SM9/64"x40		Nut SM9/64"x40		1	1
65	138S11002		卷边器座螺钉SM11/64"x40 L=5.5		Screw SM11/64"x40 L=5.5		1	1
66	13812019		卷边器座		Ruler stop seat		1	1
67	104S17002		针板螺钉(进口) SM11/64"x40		Screw SM11/64"x40		2	2
68	11414006		定做专用针板(扩大缝纫范围)		Needle plate		1	
	11315001		针板(兄弟款)		Needle plate			1
69	10115002		推板		Slide plate		1	1
70	10127009		推板簧		Slide plate spring		1	1
71	101S11019		推板簧螺钉SM3/32"x56 L=2		Screw SM3/32"x56 L=2		2	2
72	10128016		螺纹铜橡胶垫圈(薄)		Washer		1	1
73	13812007		卡簧		Buckle		1	1
74	S04021		螺钉		Screw		1	1
75	13822001		操作屏孔塞		Rubber plug		1	1
76	S10007		GB/T80凹端紧定螺钉M4×4(发黑)		Screw		2	2
77	21012018		油封垫		Oil sealing washer		1	1
78	14112008		防油板		Oil preventing plate		1	1
79	14123002		防油板油棉		Oil cotton		1	1
80	14112004		防油罩		Oil preventing plate		1	1
81	14123001		防油罩油棉		Oil cotton		1	1

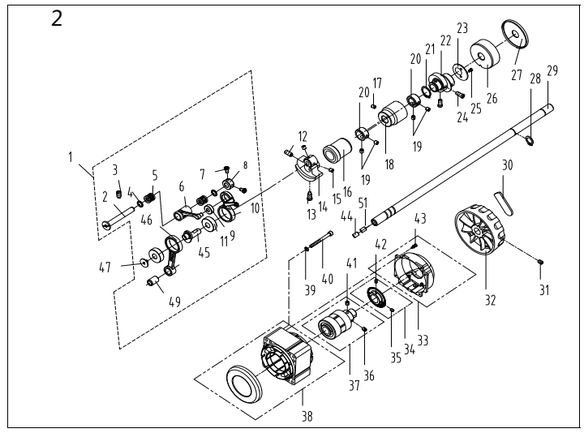

2. 上轴挑线分组件/Main Shaft & Thread Take-up Components

序号 NO.	公司件号	Part NO.	名称	PartName	零件描述	Description	数量	Number
1	1413800100		挑线组件		Thread take-up asm.		1	1
2	11426001		JK-8990-0338挑线连杆销		Thread take-up asm.		1	1
3	101S15010		JK-5550-0615左销螺钉		Thread take-up crank shaft		1	1
4	11411005		JK-8990-0340轴承支撑挡圈		Screw		2	2
5	B08003		GB/T5801-1986滚针轴承K7x10x10		Bearing support		2	2
6	11438004		JK-8990-0337-03挑线杆连杆		Bearing		1	1
7	114S11008		JK-8990-0360挡圈螺钉		Thread take-up lever crand rod		2	2
8	11408002		JK-8990-0339挡圈		Screw		1	1
9	B01013		GB/T 276-1994轴承605		Thrust collar asm.		1	1
10	11438003		JK-8990-0337-02挑线杆		Thread take-up lever		1	1
11	B01014		GB/T 276-1994轴承608		Bearing 608		2	2
12	101S15004		针杆曲柄紧固螺钉 SM9/32"x28 L=16		Screw SM9/32"x28 L=16		1	1
13	101S11003		针杆曲柄定位螺钉SM9/32"x28 L=16		Screw SM9/32"x28 L=16		1	1
14	14104004		针杆曲柄		Needle bar crank		1	1
15	101S15002		送料轴挡圈螺钉SM1/4"x40 L=6		Screw SM1/4"x40 L=6		2	2
16	1410300200		上轴前轴套组件		Main shaft bushing front		1	1
17	101S15006		夹线器螺钉SM15/64"x28 L=7		Screw SM15/64"x28 L=7		1	1
18	12203002		主轴中轴套		Main shaft bushing mid		1	1
19	101S15007		压杆导架螺钉SM1/4"x40 L=8		Screw SM1/4"x40 L=8		2	2
20	10108001		上轴挡圈		Main shaft thrust collar		1	1
21	H03002		挡圈20		Snap ring 20		1	1
22	11310014		送料偏心轮		Feed eccentric cam		1	1
23	10112017		送料偏心轮盖板		Cover plate		1	1
24	101S11013		送料偏心轮螺钉 SM1/4"x40 L=13		Screw SM1/4"x40 L=13		2	2
25	113S11003		护针片螺钉 SM9/64"x40 L=5		Screw SM9/64"x40 L=5		2	2
26	10103025		上轴后轴套		The rear axle sleeve		1	1
27	10122105		上轴后套挡油油封		Oil seal		1	1
28	H03001		GB/T894.1-1986挡圈15		Snap ring 15		1	1
29	14102060		上轴		Main shaft		1	1
30	13811021		手轮贴条		Handwheel lable		1	1
31	S10009		螺钉		Screw		2	2
32	302830		手轮（喷漆）		Handwheel		1	1
33	1383300700		电机罩壳组件（配鲍麦克斯）		Motor cover asm.powermax		1	1
34	1383300900		电机光栅组件（配鲍麦克斯）		Motor grating sensor asm		1	1
35	GB/T77-2000		内六角平端紧定螺钉M3×4		Screw M3×4		1	1
36	GB/T77-2000		内六角平端紧定螺钉M6×6		Screw M6×6		1	1
37	1383300400		电机转子总成		Motor rotor		1	1
38	13833003		电机定子总成（配鲍麦克斯）		Motor stator,powermax		1	1
39	GB/T93-1987		弹垫5		Spring washer 5		4	4
40	GB/T70.1 -2000		内六角圆柱头螺钉M5×50 8.8级		Screw M5×50		4	4
41	GB/T78-2000		内六角锥端紧定螺钉M6×8		Screw M6×8		1	1
42	GB/T78-2000		内六角锥端紧定螺钉M3×4		Screw M3×4		1	1
43	GB/T9074.8		一十字槽小盘头螺钉组合件M3×8		Screw		6	6
44	10122012		上轴孔塞		Rubber plug		1	1
45	11402007		JK-8990-0337-004挑线杆轴		Needle bar crand		1	0
46	11438002		JK-8990-0337-01针杆连杆		needle bar connecting rod		1	1
47	114S30004		JK-8990-0337-05挑线曲柄左螺钉		Screw (left twist)		1	1
49	12203004		JK-8988-0301-2针杆连杆铜套		needle-bar rod copper sleeve		1	1
51	14123003		上轴毡塞		Rubber plug		1	1

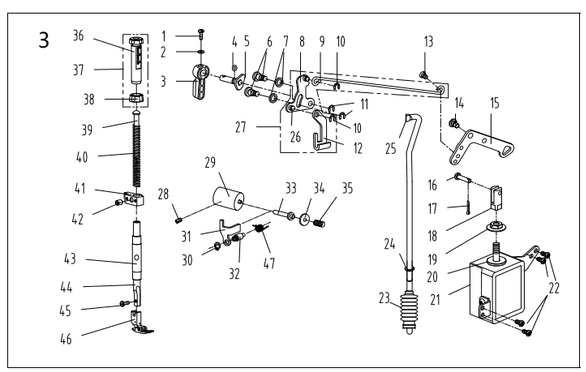

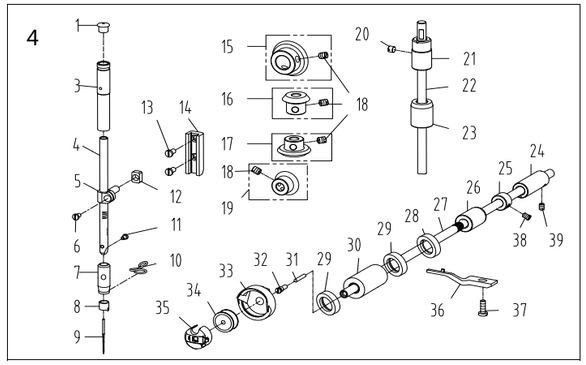

4. 针杆、竖轴、下轴部件/Needle bar,Upright Shaft & Hook Driving Shaft Componer

序号 NO.	公司件号	Part NO.	名称	PartName	零件描述	Description	数量	Number
1	10122013		针杆上衬套孔塞		Rubber plug		1	1
3	14103005		针杆上衬套		Needle bar bushing upper		1	1
4	11402034		针杆（DLC处理）		Needle bar		1	1
5	14104007		针杆连接柱(DLC处理）		Needle bar connecting rod		1	1
6	101S11005		螺钉 SM9/64"x40 L=6		Screw SM9/64"x40 L=6		1	1
7	14103010		针杆下套		Needle bar bushing lower		1	1
8	10113002		针杆线勾		Needle bar thread guide		1	1
9	10117001		机针（14#）		Needle		1	1
10	10413001		针杆下衬套线勾		Lower bushing thread guide		1	1
11	104S11006		支针螺钉(进口) SM1/8"x44 L=4.5		Screw SM1/8"x44 L=4.5		1	1
12	10109001		针杆连接柱滑块		Slide block		1	1
13	101S11008		滑块导轨螺钉SM11/64"x40 L=8		Screw SM11/64"x40 L=8		2	2
14	14109001		针杆接头滑块导轨		Needle bar guide		1	1
15	10425004		上轴伞齿轮		Upper shaft bevel gear		1	1
16	10425003		竖轴上伞齿轮		Upper small bevel gear asm		1	1
17	10425002		竖轴下伞齿轮		lower large bevel gear asm		1	1
18	101S15014		齿轮螺钉SM1/4"x40 L=7		Screw SM1/4"x40 L=7		8	8
19	10425001		下轴伞齿轮		Hook drive shaft bevel gear		1	1
20	113S11036		一字开槽紧定螺钉SM15/64"x28 L=4.7		Screw SM15/64"x28 L=4.7		1	1
21	10403020		竖轴上轴套		Upright shaft bushing upper		1	1
22	10102007		竖轴		Upright shaft		1	1
23	10403013		竖轴下轴套		Upright shaft bushing lower		1	1
24	10403019		下轴后轴套		Hook driving shaft bushing back		1	1
25	10108002		下轴挡圈		Hook driving shaft snap ring		1	1
26	14003004		下轴中套		Lower shaft middle bushing		1	1
27	11304003		下轴		Hook driving shaft		1	1
28	11522001		油封组件12		oil seal 12		1	1
29	1142201600		油封组件18		oil seal 18		2	2
30	14103004		下轴前轴套组件		Hook driving shaft bushing front		1	1
31	10123009		下轴限油芯		Oil wick		1	1
32	101S30005		下轴限油螺钉		set screw		1	1
33	11418003		广濑中厚料旋梭(扩大缝纫范围)		Hook asm（Hirose）		1	1
	11418007		精品旋梭(国产)		Hook asm（China）		1	1
	11418002		德盛有尾巴厚料旋梭(方德款)		Hook asm（China Desheng）		1	1
	11418004		广濑厚料旋梭(新)(有尾巴)		Hook asm（Hirose）		1	1
34	10118003		梭心		Bobbin		1	1
35	11218504		梭壳		Bobbin case asm.		1	1
36	10112016		旋梭定位钩		Finger postioner		1	1
37	116S11005		牙架曲柄螺钉 SM11/64"×40 L=13		Screw SM11/64"×40 L=13		1	1
38	101S11012		下轴挡圈螺钉 SM11/64"×40 L=4.8		Screw SM11/64"×40 L=4.8		2	2
39	113S14020		下轴后套螺钉SM11/64"×40 L=6		Screw SM11/64"×40 L=6		1	1

3. 压料、自动抬压脚分组件/Presser Bar ，Auto Lifter Components

序号 NO.	公司件号	Part NO.	名称	PartName	零件描述	Description	数量	Number
1	101S11010		压脚扳手螺钉SM9/64"x40 L=11		Screw SM9/64"x40 L=11		1	1
2	10128002		压脚扳手螺钉垫圈		Washer		1	1
3	13811029		压脚扳手		Hand lifter		1	1
4	O01004		O型圈		Rubber ring		1	1
5	1411000200		压脚扳手凸轮分部件		Hand lifter cam asm.		1	1
6	101S20001		前杠杆螺纹销		Screw		2	2
7	10128016		螺纹铜橡胶垫圈(薄)		Washer		2	2
8	1011201100		抬压脚前杠杆分部件		Lift front lever component		1	1
9	10112013		抬压脚拉杆		Knee lifter pull rod		1	1
10	H05003		GB/T896-1986挡圈 5		Snap ring		2	2
11	11329020		挡圈 5		Snap ring		5	5
12	10112010		压脚升降板		Lifting plate		1	1
13	101S20004		抬压脚拉杆螺钉SM3/16"x32		Hinge Screw SM3/16"x32		1	1
14	101S20003		后杠杆轴位螺钉SM15/64"x28		Hinge screw SM15/64"x28		1	1
15	11312034		抬压脚后杠杆		Knee lifter back lever		1	1
16	11326005		销子		Pin		1	1
17	P04001		开口销 GB/T91 2×14		Cotter pin		1	1
18	11326006		电磁铁接头		Solenoid connector		1	1
19	113S16004		法兰螺母M8		Flange nuts M8		1	1
20	11322008		电磁铁上垫片		washer		1	1
21	1383001200		抬压脚电磁铁组件		Solenoid asm.		1	1
22	101S11001		后窗板螺钉SM3/16"×28 L=9		screw SM3/16"×28 L=9		4	4
23	14022009		抬压脚顶杆密封帽		Seal cap		1	1
24	H03042		GB/T894.1-1986轴用弹性挡圈-A型5x0.6		Snap ring		1	1
25	14012015		抬压脚顶杆		Knee lifter connecting rod		1	1
26	14126006		前杠杆轴销		Pin		1	1
27	1411200300		抬压脚前杠杆组件		Knee lifter lever asm		1	1
28	138S08006		小夹线器固定螺钉SM3/16"×28 L=7		Screw SM3/16"×28 L=7		1	1
29	1413000900		松线电磁铁组件		Solenoid		1	1
30	11329020		挡圈5		Snap ring 5		1	1
31	14101017		松线顶板		Wire release plate		1	1
32	14126002		松线顶板连接销		Pin		1	1
33	10126003		松线辅钉		Thread release supporting pin		1	1
34	10128001		松线辅钉垫片		washer		1	1
35	10127003		松线辅钉弹簧		Spring		1	1
36	13811027		调压螺钉		Press regulating screw		1	1
37	1381102700		调压螺钉组件		Presser regulating screw nut asm.		1	1
38	13811028		调压螺母		Press regulating nut		1	1
39	10102003		调压导杆		Press regulating guide bar		1	1
40	11427033		调压簧		Press regulating spring		1	1
41	10409001		压杆导架		Presser bar guide bracket		1	1
42	101S15007		压杆导架螺钉 SM1/4"x40 L=8		Screw SM1/4"x40 L=8		1	1
43	14103012		压杆衬套		Presser bar bushing,lower		1	1
44	11402009		压杆		Presser bar		1	1
45	101S11009		活压脚螺钉 SM9/64"x40 L=10.5		Screw SM9/64"x40 L=10.5		1	1
46	1401600200		带刀压脚组件（少鸟巢装置专用）		Presser foot asm(For the No Bird's Ne		1	1
47	14127002		松线顶板复位簧		Spring		1	1

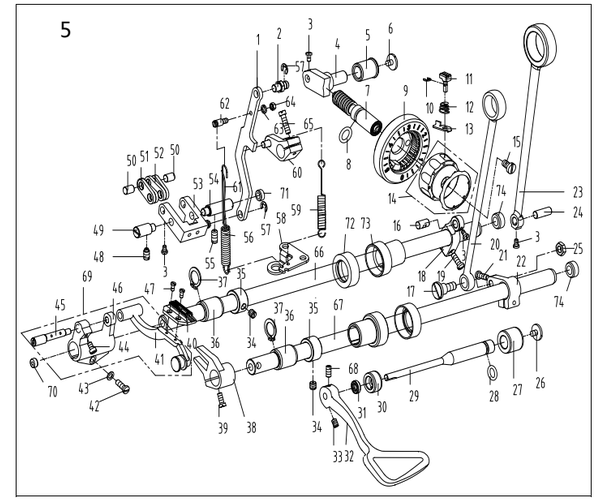

5. 送料分组件/Feed Mechanism Components

序号 NO.	公司件号	Part NO.	名称	PartName	零件描述	Description	数量	Number
1	11405015		倒送料连杆		Reverse feed connecting rod		1	1
2	11426021		倒送料连杆销		Connecting rod pin		1	1
3	101S11005		螺钉 SM9/64"x40 L=6		Screw SM9/64"x40 L=6		6	6
4	11401015		送料调节器		Feed regulator		1	1
5	11403043		送料调节器轴套		Feed regulator bushing		1	1
6	101S11023		送料调节器轴端螺钉SM3/16"x28 L=6.5		Screw SM3/16"x28 L=6.5		1	1
7	13826005		标盘螺柱		Feed regulator stud		1	1
8	10122016		送料调节螺钉O形圈		Rubber ring		1	1
9	13811008		固定表盘		Fixing dial plate		1	1
10	H05018		GB/T896-1986挡圈3.5		Snap ring 3.5		1	1
11	13811009		标盘按钮		Dial plate button		1	1
12	13827002		按钮复位簧		Spring		1	1
13	13812010		上限位片		Upper limit patch		1	1
14	1381100700		标盘旋钮组件		Knob component		1	1
15	101S11022		送料距旋钮螺钉SM3/16"x28 L=18		Screw SM3/16"x28 L=18		1	1
16	10126011		送料曲柄销		Feed rocker crank pin		1	1
17	101S20005		抬牙连杆轴位螺钉 SM9/32"x28		hinge Screw SM9/32"x28		1	1
18	10104002		送料曲柄		Feed rocker shaft crank		1	1
19	101S11016		送料曲柄螺钉SM3/16"x28 L=14		Screw SM3/16"x28 L=14		1	1
20	400093		抬牙连杆		Connecting rod		1	1
21	101S11016		送料曲柄螺钉 SM3/16"x28 L=14		Screw SM3/16"x28 L=14		1	1
22	10104004		抬牙后曲柄		Feed driving shaft crank		1	1
23	400091		送料连杆		Rocker shaft connecting rod		1	1
24	10126006		送料连杆销		Connecting rod pin		1	1
25	101S16003		抬牙连杆轴位螺母 SM9/32"x28		Hinge Screw SM9/32"x28		1	1
26	101S11023		送料调节器轴端螺钉SM3/16"x28 L=6.5		Screw SM3/16"x28 L=6.5		1	1
27	13803021		倒送料轴后轴套		Reverse feed shaft bushing back		1	1
28	13822003		倒送料轴O形圈		Rubber ring		1	1
29	13802010		倒缝送料轴		Reverse feed shaft		1	1
30	13803020		倒送料轴中套		Reverse feed shaft bushing mid		1	1
31	13822056		倒送料轴中套油封		Mid bushing oil seal		1	1
32	302665		倒缝扳手（喷漆）		Reverse feed lever asm		1	1
33	138S10010		内六角锥端紧定螺钉M5X8		Screw M5X8		1	1
34	101S15002		送料轴挡圈螺钉SM1/4"x40 L=6		Screw SM1/4"x40 L=6		4	4
35	10108003		送料轴挡圈		Feed rocker shaft snap ring		2	2
36	10403015		轴套		Bushing		2	2
37	H03001		GB/T894.1-1986挡圈 15		Snap ring 15		2	2
38	10104003		抬牙叉形曲柄		Driving shaft crank		1	1
39	101S11020		抬牙叉形曲柄螺钉SM11/64"x40 L=10.5		Screw SM11/64"x40 L=10.5		1	1
40	11414002		送料牙		Feed dog		1	
	11314001		送料牙(兄弟款)		Feed dog(Brother type)			1
41	470060		牙架		Feed bar asm.		1	1
42	101S11016		送料曲柄螺钉SM3/16"x28 L=14		Screw SM3/16"x28 L=14		1	1
43	10128003		牙架座螺钉垫圈		Washer		1	1
44	101S11025		复位板螺钉SM11/64"x40 L=7		Screw SM11/64"x40 L=7		1	1
45	11226001		牙架销		Feed bar pin		1	1
46	480095		牙架座		Feed bar bed.		1	1
47	101S11018		送料牙螺钉 SM1/8"x44 L=6		Screw SM1/8"x44 L=6		2	2
48	101S15010		左销螺钉 SM15/64"x28 L=10.5		Screw SM15/64"x28 L=10.5		1	1
49	10126009		送料摆动板座左销		Left pin		1	1
50	10126007		短摆动板连杆销		Connecting pin		2	2
51	10109005		送料短摆动板		Feed short shaking plate		2	2
52	10109004		送料长摆动板		Feed long shaking plate		2	2
53	1120100200		送料摆动板座分部件		Feed shaking plate bed components		1	1
54	10126010		送料摆动板座右销		Right pin		1	1
55	113S14010		左销螺钉SM15/64"x28 L=12		Screw SM15/64"x28 L=12		1	1
56	11427011		送料调节弹簧		Spring		1	1
57	11329020		挡圈5		Snap ring 5		2	2
58	14012005		油量检测装置固定板		Fixed plate		1	1
59	13827006		倒送料拉簧		Reverse feed pull spring		1	1
60	1140402700		倒送料曲柄组件		Feed reverse crank asm.		1	1
61	11321005		油管		Tube		1	1
62	114S30007		弹簧悬置螺钉		Screw		1	1
63	W02015		GB/T93-1987 弹簧垫圈M4		Spring washer M4		1	1
64	114S16004		螺母SM11/64"x40		Nut SM11/64"x40		1	1
65	S01102		螺钉 SM3/16"x28 L=18		Screw SM3/16"x28 L=18		1	1
66	14002003		送料轴		Feed rocker shaft		1	1
67	14002002		抬牙轴		Feed driving shaft		1	1
68	S10035		GB/T80-2000螺钉M5×8		Screw		1	1
69	400689		牙架组件(成品)		Feed bar asm.		1	1
70	14022003		送料轴前孔塞		spout plug		1	1
71	14022004		右销孔塞		spout plug		1	1
72	1142200800		油封组件22		oil seal		2	2
73	14003002		送料轴后轴套		axle sleeve		2	2
74	12422001		橡皮塞15.5		Rubber plug 15.5		2	2

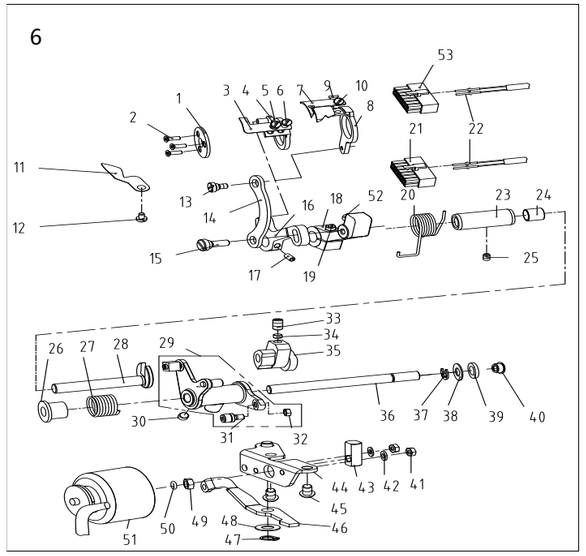

6. 切线装置部件/Thread Trimmer Components

序号 NO.	公司件号 Part NO.	名称 PartName	零件描述 Description	数量	Number
1	14112005	刀架压板	Knife bracket press component	1	1
2	114S17001	刀架压板螺钉	Screw	3	3
3	14119002	辅助动刀	knife	1	1
4	1410700200	剪线辅刀架组件	Knife bracket	1	1
5	113S17002	活动刀固定螺钉SM11/64"x40 L=4.4	Screw SM11/64"x40 L=4.4	1	1
6	131S01002	JK-8995-0432 螺钉SM11/64*40	Screw SM11/64*40	1	1
7	14119001	活动刀	knife	1	1
8	14107001	剪线主刀架	Knife bracket	1	1
9	113S17002	活动刀固定螺钉SM11/64"x40 L=4.4	Screw SM11/64"x40 L=4.4	1	1
10	131S01002	JK-8995-0432 螺钉SM11/64*40	Screw SM11/64*40	1	1
11	14112001	分线片	Needle guard patch	1	1
12	201S11009	螺钉SM9/64"x40 L=5.5	Screw SM9/64"x40 L=5.5	1	1
13	113S20001	连杆螺钉SM11/64"x40	hinge Screw SM11/64"x40	1	1
14	11312005	连杆	Connecting rod	1	1
15	141S20002	剪线曲柄轴位螺钉	Screw	1	1
16	14104003	剪线辅曲柄	Crank	1	1
17	S10007	GB/T80凹端紧定螺钉M4×4(发黑)	Screw	1	1
18	14104001	剪线曲柄	Crank	1	1
19	S05004	螺钉M5x14	Screw M5x14	1	1
20	11327001	弹簧	Spring	1	1
21	11230004	14孔接线器	Plug	1	1
22	11230005	电线插针	Pin	2	2
23	14103003	剪线轴套	Thread cutting shaft bushing	1	1
24	11503005	驱动曲柄轴衬套	Crank drive shaft bushing	1	1
25	113S14002	螺钉SM11/64"x40 L=5.5	Screw SM11/64"x40 L=5.5	1	1
26	11322002	扭簧端盖	Spring cover	1	1
27	11327002	弹簧	Spring	1	1
28	14104002	剪线凸轮曲柄轴	Crank shaft	1	1
29	1400400100	剪线驱动组件	Thread trimmer drive asm.	1	1
30	116S14003	针杆曲柄销定位螺钉SM1/4"x40 L=4.5	Screw SM1/4"x40 L=4.5	1	1
31	11324001	滚柱	Roolling pin	1	1
32	113S16002	螺母SM11/64"x40	Nut SM11/64"x40	1	1
33	116S14005	螺钉SM1/4"x40 L=10	Screw SM1/4"x40 L=10	2	2
34	11309030	凸轮顶柱	Push rod	2	2
35	11310004	凸轮	Cam	1	1
36	14002004	切线驱动轴	Shaft	1	1
37	H05013	GB/T896-1986挡圈	Snap ring	1	1
38	10112003	针杆曲柄护板	Cunter weight protecting	1	1
39	11322003	电磁铁缓冲片	Solenoid cushion rubber	1	1
40	14022013	孔塞8.5	spout plug 8.5	1	1
41	N01001	螺母 M4	Nut M4	2	2
42	W01013	GB/T97.1-1985垫圈4.5	Washer	2	2
43	11309001	切线电磁铁顶销	Solenoid pin	1	1
44	1401200200	切线电磁铁支架组件	Bracket	1	1
45	S17002	GB/T70.2-2000内六角平圆头螺钉M6x10	Screw M6x10	2	2
46	14012001	切线杠杆	Tangent lever	1	1
47	H03015	GB/T894.1 卡簧8	Ring 8	1	1
48	10112003	针杆曲柄护板	Needle bar crank protecting plate	1	1
49	112S16006	螺母SM1/4"X40	Nut SM1/4"X40	1	1
50	O01004	O型圈	Rubber ring	1	1
51	141303400	剪线电磁铁组件	Thread trimmer solenoid asm.	1	1
52	11322001	驱动曲柄止动块	Crank driver stopper block	1	1
53	14130001	12孔接线器	Plug	1	1

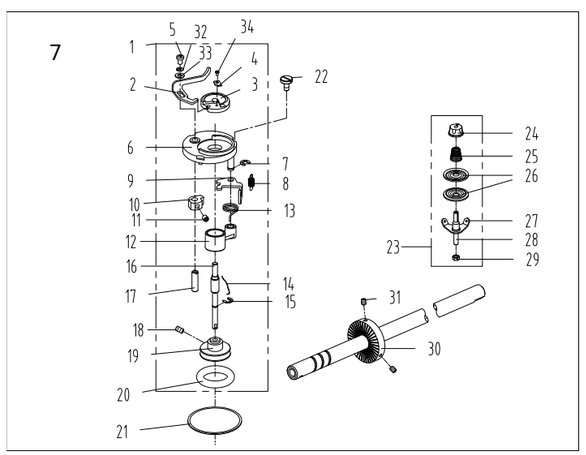

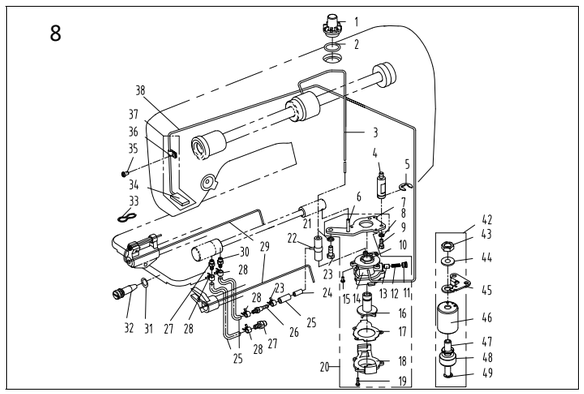

8. 润滑、油量检测组件/Oil Lublication、Oil Measuring Components

序号 NO.	公司件号 Part NO.	名称 PartName	零件描述 Description	数量	Number
1	11211004	油窗	Oil sight window	1	1
2	10122019	油窗O形圈	Rubber ring	1	1
3	13821008	上轴供油管	Main shaft oil tube	1	1
4	112S30005	油泵连接螺柱	Oil pump connecting stud	1	1
5	11329010	开口挡圈10	Snap ring 10	1	1
6	10121001	下轴供油管	Hook driving shaft oil tube	1	1
7	10112020	油泵安装板	Oil pump installing base	1	1
8	W03002	弹垫	Spring washer	1	1
9	209S12001	压脚螺钉SM11/64＂×40 L=10.5	Screw M11/64＂×40 L=10.5	1	1
10	10103022	油泵体衬套	Oil pump bushing	1	1
11	101S30007	柱塞螺钉	Plunger Screw	1	1
12	10127013	柱塞簧	Plunger spring	1	1
13	10122018	回油柱塞	Plunger	1	1
14	10120001	油泵体	Oil pump	1	1
15	S04009	油泵螺钉	Screw	3	3
16	10111003	油泵叶轮	Oil pump impeller	1	1
17	10112021	油泵叶轮托板	Oil pump impeller cover	1	1
18	10111007	油泵盖	Lubricating oil pump cover	1	1
19	101S30006	螺钉	Screw	3	3
20	1012000100	油泵分部件	Lubricating oil pump component	1	1
21	W02004	GB/T93-19877弹垫M6	Spring Washer M6	1	1
22	10136001	供油管接头	Rubber joint	1	1
23	116S30003	抬牙叉固定螺钉SM15/64＂×28 L=14.5	Screw SM15/64＂×28 L=14.5	1	1
24	14021003	铝油管	Aluminum tubing	1	1
25	14021001	油管	Tubing	1	1
26	14036004	油盘油嘴	Oil nozzle	1	1
27	14036002	回油嘴	Oil nozzle	2	2
28	11412055	油管卡簧	Oil pipe clamp spring	5	5
29	10423005	油线	Oil wick	2	2
30	14036003	供油嘴	Oil nozzle	1	1
31	O01004	GB/T3452.1-1992 O形圈4x1.8	Rubber ring 4x1.8	1	1
32	140S30001	油量调节螺钉	Oil volume adjusting screw	1	1
33	10127015	回油毡夹	Oil felt clamp	1	1
34	10123006	回油毡	Oil felt felt	1	1
35	101S11004	挑线杆护罩螺钉SM3/16"×28 L=7	Screw SM3/16"×28 L=7	1	1
36	10112023	回油管夹	Oil tube clamp	1	1
37	10121007	回油管部件	Oil return tube component	1	1
38	10121008	回油管	Oil return tube	1	1
42	1403000200	油量检测装置组件	Oil measuring device	1	1
43	N01009	螺母	Nut	1	1
44	W02003	弹性垫圈	Washer	1	1
45	14012005	油量检测装置固定板	Pull spring fixing plate	1	1
46	14011004	油量检测罩壳	Shell	1	1
47	14002005	导向柱	Guide pillar	1	1
48	14011002	浮子	Float	1	1
49	H05009	开口挡圈	Ring	1	1

7. 绕线器组件/ Bobbin Components

序号 NO.	公司件号 Part NO.	名称 PartName	零件描述 Description	数量	Number
1	1413103900	绕线器组件	Bobbin winder asm.	1	1
2	14113001	压线控制板	Thread press control plate	1	1
3	14111001	绕线衬垫	Winding pad	1	1
4	13819001	割线刀	Knife	1	1
5	114S11008	螺钉M4x6	Screw M4x6	1	1
6	14131001	绕线器装置主座	Bobbin winder bed	1	1
7	GB/T 896-1986	开口挡圈5	Snap ring	1	1
8	10127061	复位板拉簧	Spring	1	1
9	13812110	调节板	Regulating plate	1	1
10	10110030	绕线凸轮	Bobbin winder cam	1	1
11	S09042	螺钉	Screw	1	1
12	1380510600	绕线器连杆组件	Bobbin winder connecting rod	1	1
13	13827103	满线复位簧	spring	1	1
14	10127060	弹簧	Spring	1	1
15	GB/T 896-1986	开口挡圈4	Snap ring	1	1
16	13802111	绕线器主轴	Bobbin winder mian shaft	1	1
17	14102002	绕线凸轮轴	Bobbin winder cam shaft	1	1
18	S09103	绕线轮螺钉	Screw	2	2
19	13831102	绕线轮	Bobbin winder wheel	1	1
20	O01110	O型圈	Ring	1	1
21	11422062	密封垫	Washer	1	1
22	114S11003	螺钉SM3/16"×28 L=10	Screw SM3/16"×28 L=10	3	3
23	1381300600	底线夹线器	Bobbin thread tension asm.	1	1
24	13811004	夹线螺母	Thread tension nut	1	1
25	11427006	小夹线弹簧	Spring	1	1
26	10112005	夹线板	Thread tension disk	2	2
27	11413022	夹线过线板	Thread tension guide plate	1	1
28	112S13004	夹线螺钉	Screw	1	1
29	114S16001	螺母SM11/64"×40	Nut SM11/64"×40	1	1
30	11435013	绕线器驱动轮	Driving wheel	1	1
31	S10009	螺钉M6×8	Screw M6×8	2	2
32	W01013	GB/T97.1-1985垫圈4.5	Washer	1	1
33	GB/T97.1	垫圈4	Washer	1	1
34	141S11001	螺钉M3x4	Screw M3x4	1	1
26	S17011	GB/T70.2-2000内六角平圆头螺钉M3×12	Allen flat round head screw	1	1
27	14012020	拨线连杆	Dial the line connecting rod	1	1
28	H03055	GB/T894.1-1986轴用挡圈A型4	Shaft with a collar	1	1
29	N01050	GB/T6170-2000六角螺母M3	Hexagonal nut	1	1
30	1401200800	拨线驱动连杆组件	Line drive connecting rod component	1	1
31	S05037	GB/T70.1-2000内六角圆柱头螺钉M3×14	Hex cylinder head screw	1	1
32	14002008	拨线驱动轴	Line drive shaft	1	1
33	N01051	GB/T6170-2000六角螺母M4	Hexagonal nut	1	1
34	14013009	线勾	Wire hook	1	1
35	W02100	GB/T93-19877弹簧垫圈4×0.8	Spring washer	1	1
36	W01097	GB/T97.3-2006平垫圈4x0.8	washer	1	1
37	W01098	GB/T6170-2000小垫圈A级5×1	Small washer	2	2
38	11329020	开口挡圈5	Open ring	1	1

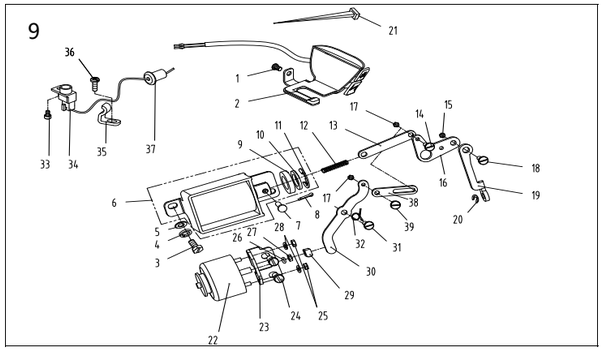

9. 自动倒送料开关、感应抬压脚组件/Automatic Reverse Feed Components

序号 NO.	公司件号 Part NO.	名称 PartName	零件描述 Description	数量	Number
1	101S11004	挑线杆护罩螺钉SM3/16"×28 L=7	Screw SM3/16"×28 L=7	1	1
2	1383003600	双开关组件	Auto reverse feed switch asm	1	1
3	116S30003	抬牙叉固定螺钉SM15/64"×28 L=14.5	Screw SM15/64"×28 L=14.5	2	2
4	W02004	GB/T93-1987弹垫M6	Spring washer M6	2	2
5	11628005	抬牙叉固定螺钉垫圈	Washer	2	2
6	1383003400	自动倒送料电磁铁	Auto reverse feed solenoid	1	1
7	11326005	销子	Pin	1	1
8	P04001	开口销 GB/T91 2×14	Cotter pin	1	1
9	11322040	橡胶垫片	rubber plunger	1	1
10	11328031	垫片	Washer	1	1
11	H05014	GB/T896-1986开口挡圈	Snap ring	1	1
12	11227006	自动倒送料连杆顶弹簧	Plunger spring	1	1
13	14112006	自动倒送料连杆	Auto reverse feed connecting rod	1	1
14	141S20004	曲柄短螺钉SM11/64"×40	Hinge Screw SM11/64"×40	1	1
15	112S16007	曲柄长螺母SM1/4"×28	Nut SM1/4"×28	1	1
16	14104005	自动倒送料曲柄	Auto reverse feed crank	1	1
17	112S16008	曲柄短螺母SM11/64"×40	Nut SM11/64"×40	1	1
18	112S20001	曲柄长螺钉 SM1/4"×28	Hinge Screw SM1/4"×28	1	1
19	11212029	自动倒送料拉杆	Auto reverse feed pull shaft	1	1
20	11329020	开口挡圈5	Snap ring 5	1	1
21	11211005	尼龙扎带	Cable band	8	8
22	1413003300	短线头电磁铁组件	Thread trimmer solenoid asm.	1	1
23	14112002	短线头电磁铁支架	Bracket	1	1
24	101S11026	油泵安装螺钉SM15/64"x28 L=9	Screw SM15/64"X28 L=9	2	2
25	N01001	螺母 M4	Nut M4	2	2
26	O01004	O型圈	Rubber ring	1	1
27	112S16006	螺母SM1/4"X40	Nut SM1/4"X40	1	1
28	W01013	GB/T97.1-1985垫圈4.5	Washer	2	2
29	14126001	短线头电磁铁顶销	pin	1	1
30	14105001	短线头连杆	rod	1	1
31	141S20001	倒送料连杆轴位螺钉	Screw	1	1
32	14127001	复位扭簧	Lower sensor	1	1
33	S05254	GB/T70.1-2000螺钉M2.5×4	Screw M2.5×4	1	1
34	1403003000	下感应探头组件	Lower sensor	1	1
35	14013022	过线压板	Wire guide press plate	1	1
36	113S11004	松线导管压板螺钉M4x8	Screw M4x8	1	1
37	13822030	橡皮塞（单孔）	Rubber plug	1	1
38	14105002	辅助连杆	rod	1	1
39	141S20003	轴位螺钉SM11/64"x40	Screw SM11/64"X40	1	1

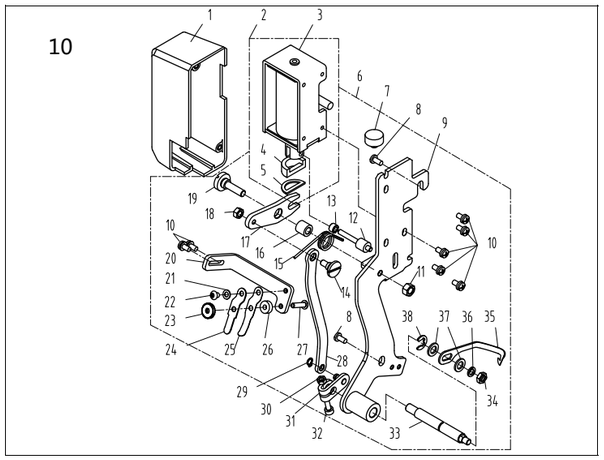

10. 少鸟巢装置/ No Bird's Nest Components

序号 NO.	公司件号 Part NO.	名称 PartName	零件描述 Description	数量	Number
1	14011003	罩壳	Box	1	1
2	1403003500	拨线电磁铁组件	Dial the line electromagnet components	1	1
3	14022026	橡皮垫	Rubber mat	1	1
4	14028020	缓冲垫片	Buffer gasket	1	1
5	1401200600	勾线装置组件	Cancel the device components	1	1
6	14022027	橡皮垫块	Rubber pad	1	1
7	101S11001	后窗板螺钉SM3/16"x28 L=9	After throwing a screw	2	2
8	1401200700	拨线电磁铁支架组件	Dial the line electromagnet stent compone	1	1
9	S15010	GB/T9074.8-1988十字槽小盘头螺钉组合	Philips small head screw assembly	7	7
10	140S16008	拨线传动板轴位螺母	Dial the line shaft drive plate a nut	1	1
11	14026004	拨线传动销	Dial the line drive pin	1	1
12	14008001	滑动衬套	The sliding sleeve	1	1
13	140S20021	拨线连杆轴位螺钉	Dial the line connecting rod shaft screw	1	1
14	14027020	复位弹簧	Reset spring	1	1
15	14003008	复位衬套	Reset the bushing	1	1
16	14012024	拨线传动板	Dial the line drive board	1	1
17	140S16007	拨线连杆轴位螺母	Dial the line connecting rod shaft nut	1	1
18	140S20020	拨线传动板轴位螺钉	Dial the line drive board shaft screw	1	1
19	14012021	压片支架	Tablet bracket	1	1
20	W01099	GB/T848-2002小垫圈A级3×0.5	Small washer	1	1
21	S17010	GB/T70.2-2000内六角平圆头螺钉M3×4	Allen flat round head screw	1	1
22	N06001	滚花螺母3	Knurl nut	1	1
23	14013011	压片	tablet	1	1
24	14013010	滑压片	Sliding tablet	1	1
25	14022025	橡胶圈	Rubber ring	1	1

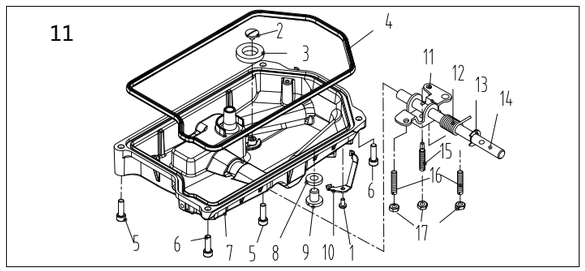

11. 油盘、膝抬压脚分组件/Oil Ceservoir , Knee Lifter Components

序号 NO.	公司件号 Part NO.	名称 PartName	零件描述 Description	数量	Number
1	113S11004	松线导管压板螺钉M4x8	Screw M4x8	1	1
2	101S11023	送料调节器轴端螺钉	Screw	1	1
3	10131001	油盘磁铁	Oil reservoir magnet	1	1
4	14022001	油盘密封垫	Seal	1	1
5	S05242	油盘固定螺钉M6x40	Screw M6 L=40	2	2
6	S05240	油盘固定螺钉M6x20	Screw M6 L=20	2	2
7	14001005	油盘	Oil reservoir	1	1
8	O01005	O形圈	Rubber ring	1	1
9	114S11011	齿轮箱盖螺钉	Screw	1	1
10	14013023	电线压板	Wire clamp	1	1
11	10112027	抬压脚双向曲柄	Knee lifter crank	1	1
12	14027016	双向曲柄扭簧	Knee lifter spring	1	1
13	H05010	GB/T896-1986挡圈10	Snap ring 10	1	1
14	1400200100	抬压脚轴组件	Knee lifter shaft	1	1
15	140S10002	双向曲柄螺钉	Screw	1	1
16	101S15012	双向曲柄限位调节螺钉M6 L=20	Screw M6 L=20	2	2
17	101S16004	双向曲柄限位调节螺母 M6	Nut M6	3	3

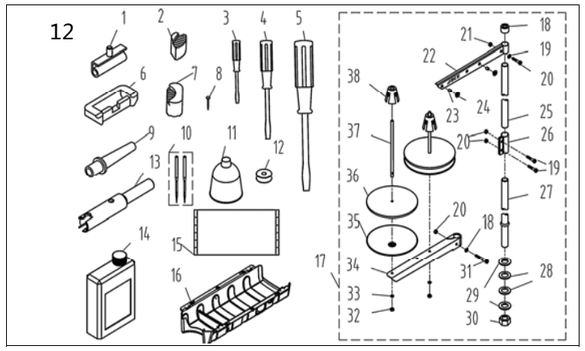

12. 机头附件/Machine Head Accessories

序号 NO.	公司件号 Part NO.	名称 PartName	零件描述 Description	数量	Number
1	1011203100	机头连接钩部件	Hinge component	2	2
2	14022022	机头座垫	Die cushion	2	2
3	10131004	螺丝刀（小）	Screw driver,small	1	1
4	10131003	螺丝刀（中）	Screw driver,medium	1	1
5	20731047	螺丝刀（大）	Screw driver,large	1	1
6	10122060	机头连接钩座	Head connecting rubber cushion	2	2
7	14022023	机头支架	Nose support	2	2
8	101S30010	机头连接钩座钉	Nail	4	4
9	10111011	机头支柱	Machine head rest pin	1	1
10	10117021	机针（14#）	Needle	4	
	10117022	机针DP×5#21（厚料）	Needle		4
11	20131039	漏斗	Funnel	1	1
12	10118003	梭心	Bobbin	2	2
13	14002015	抬压脚轴连接杆	Connecting rod	1	1
14	1011101200	油箱部件	Oiler component	1	1
15	13831018	防尘罩	Dust cover	1	1
16	14011001	油盘托盘组件	Disk tray	1	1
17	1383100300	线架组件	Thread stand asm.	1	1
18	20131019	线架杆顶防护橡皮	Spool rest rod rubber cap	1	1
19	S04050	螺钉M5 L=16	Screw M5 L=16	3	3
20	W01047	垫圈M5	Washer M5	2	2
21	N01034	螺母M5	Nut M5	4	4
22	13831022	上线架过线杆	Spool rest arm upper	1	1
23	10113011	过线圈（内）	Thread guide ring	2	2
24	10113010	过线圈(外)	Thread guide ring	2	2
25	13831019	线架杆上节	Spool rest rod upper	1	1
26	13831021	线架杆接头	Spool rest rod joint	1	1
27	13831020	线架杆下节	Spool rest rod lower	1	1
28	10122106	橡胶垫圈	Spool rest rod rubber ring	2	2
29	W01048	垫圈M16	Washer M16	2	2
30	N02004	螺母 M16	Spool rest rod nut M16	1	1
31	S04051	螺钉 M5	Spool rest arm lower screw M5	1	1
32	N01034	螺母 M5	Nut M5	2	2
33	W02027	弹簧垫圈 M5	Spring washer M5	2	2
34	13831023	下线架过线杆	Spool rest arm lower	1	1
35	13831024	线盘	Spool rest	2	2
36	20131010	线盘垫	Spool rest cushion	2	2
37	20131006	线盘钉	Spool pin	2	2
38	13831025	线团防松垫	Spool retainer	2	2

杰克缝纫机股份有限公司

杰克缝纫机

全球销量遥遥领先

公司地址：台州市椒江区机场南路十五号

邮编：318000

国内销售部：

电话：0086-0576-88177788 88177789

传真：0086-0576-88177758

国贸部：

电话：0086-0576-88177782 88177774

传真：0086-0576-88177787

免费售后服务电话：400-8876858

http://www.chinajack.com

资料如有更改，恕不另行通知，以实物为准。

请您扫下杰克服务号

www.chinajack.com

2017.4